Product Information
06/2015

Interroll Belt Conveyor Solutions

Spirals, Lifts, Merges, Chutes & The Interroll Portec Belt Curve

INSPIRED BY EFFICIENCY

Contents

Belt Conveyors & Merges **4**
BM 4081 HD 4
BM 4081 CD 6
BM 4081 CD Incline / Decline 8
Belt Merge 10
Angles Merges 12
Queue Flo 14

Belt Curves **16**
Interroll Portec Belt Curve 16
Belt Curve Airport Applications 18
Belt Curve CEP Applications 19
Z-Turn Interroll Portec Belt Curve 20
Spiral Curves 22
Spiral Lift 24

Chutes **26**
Fiberglass Chutemaster 26
Spiral Fiberglass Chute with Skate Wheels 28
STS Spiral Totes Slide 30

Supermarket Solutions **32**
Cassette 32
Drum Motors 33

© 2015 Interroll

Belt Conveyors & Merges:
BM4081 (HD)

Interroll Belt Conveyor BM 4081 (HD)

The Interroll Belt Conveyor BM 4081 (Head Drive)
is a slider bed conveyor suitable for transporting boxes, containers, etc.

Technical Data

General technical data	
Max. load capacity	35 lb/ft (50 kg/m)
Conveyor speed	20 to 200 ft/min (0.10 to 1.0 m/s)
Inclined/declined	Not suitable
Ambient temperature	+25 to +105 °F (-5 to + 40 °C)

Drive	
Available voltage	230 V / 60 Hz / 1 phase
	480 V / 60 Hz / 3 phase
Motor type	Max. 1.0HP/.75kW drum motor or shaft-mounted gear motor
Diameter of drive roller	3.15" (80mm)
Diameter of idler roller	3.15" (80mm)
Bearings	Flange bearing, above 150 ft/min
	Self-aligning ball bearing, up to 150 ft/min

Materials	
Conveyor belt	Two-ply polyester fabric with PVC cover
Slider bed	Galvanized steel
Drive/idler roller	Aluminum extrusion with steel axles
Support legs	Fabricated steel or extruded aluminum, height adjustable

Side frame	
Side frame	Aluminum extrusion, height 4.75" (120mm)
Side guards (optional)	Fabricated steel or aluminum extrusion

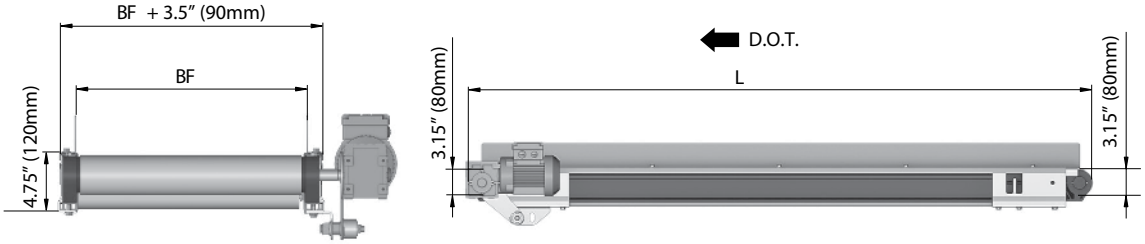

Arrow indicates direction of travel shown with optional gear motor.

Dimensions

Width (BF)	12", 16", 20", 24", 30"
Conveyor length (L)	30" to 400" (762mm to 10,000mm)

© 2015 Interroll

Belt Conveyors & Merges:
BM4081 (CD)

Interroll Belt Conveyor BM 4081 (CD)

The Interroll Belt Conveyor BM 4081 (Center Drive)
is a slider bed conveyor suitable for transporting boxes, containers, etc. over long lengths.

Technical Data

General technical data	
Max. load capacity	35 lb/ft (50 kg/m)
Conveyor speed	20 to 400 ft/min (0.10 to 2.0 m/s)
Inclined/declined	Not suitable
Ambient temperature	+25 to +105 °F (-5 to + 40 °C)

Drive	
Available voltage	230 V / 60 Hz / 1 phase
	480 V / 60 Hz / 3 phase
Motor type	Max. 5.0HP/3kW drum motor or shaft-mounted gear motor
Diameter of drive roller	5.25" (132mm)
Diameter of idler roller	3.15" (80mm)
Bearings	Flange bearing, above 150 ft/min
	Self-aligning ball bearing, up to 150 ft/min

Materials	
Conveyor belt	Two-ply polyester fabric with PVC cover
Slider bed	Galvanized steel
Drive/idler roller	Aluminum extrusion with steel axles
Support legs	Fabricated steel or extruded aluminum, height adjustable

Side frame	
Side frame	Aluminum extrusion, height 4.75" (120mm)
Side guards (optional)	Fabricated steel or aluminum extrusion

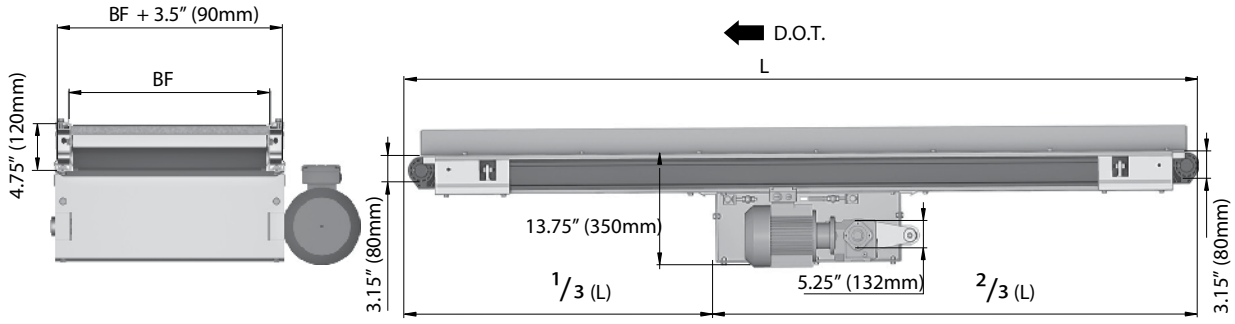

Arrow indicates direction of travel shown with optional gear motor.

Dimensions

Width (BF)	12", 16", 20", 24", 30"
Conveyor length (L)	60" to 1200" (1500mm to 30,000mm)

© 2015 Interroll

Belt Conveyors & Merges:
BM4081 (CD) Incline/Decline

Interroll Belt Conveyor BM 4081 (CD) Incline/Decline

The Interroll Belt Conveyor BM 4081 Incline/Decline (Center Drive)
is suitable for transporting boxes, containers, etc. on inclines and declines.

BM4081 (CD) INCLINE/DECLINE

Technical Data

General technical data	
Max. load capacity	35 lb/ft (50 kg/m)
Conveyor speed	20 to 400 ft/min (0.10 to 2.0 m/s)
Inclined/declined	Suitable
Ambient temperature	+25 to +105 °F (-5 to + 40 °C)
Drive	
Available voltage	230 V / 60 Hz / 1 phase
	480 V / 60 Hz / 3 phase
Motor type	Max. 5.0HP/3kW drum motor or shaft-mounted gear motor
Diameter of drive roller	5.25" (132mm)
Diameter of idler roller	3.15" (80mm)
Bearings	Flange bearing, for speeds over 150 ft/min
	Self-aligning ball bearing, for speeds up to 150 ft/min
Materials	
Conveyor belt	Two-ply polyester fabric with logitudinally grooved cover
Slider bed	Galvanized steel
Drive/idler roller	Aluminum extrusion with steel axles
Support legs	Fabricated steel or extruded aluminum, height adjustable
Side frame	
Side frame	Aluminum extrusion, height 4.75" (120mm)
Side guards (optional)	Fabricated steel or aluminum extrusion

Dimensions

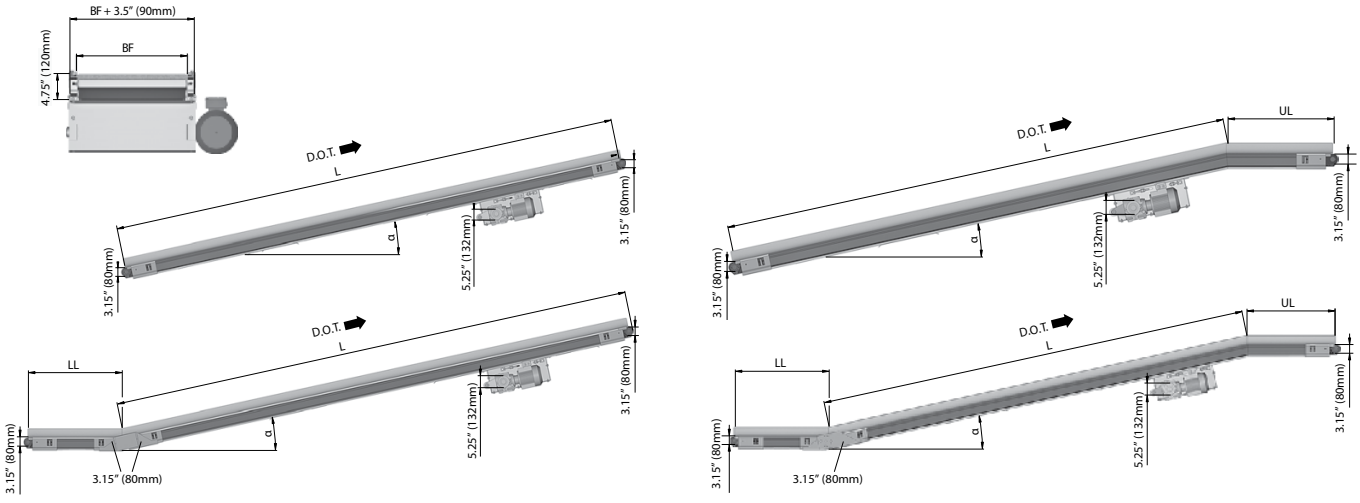

Arrow indicates direction of travel shown with optional gear motor.

Belt Conveyors & Merges:
Belt Merge

Multi Conveyor Merging Operations

When You Need To Merge Two or More Conveyor Lines.

The Most Reliable - Belt Merge Conveyors from Interroll!

Interroll Belt Merge Conveyors facilitate the merging of two or more conveyor lines into a single product transport line and provide a solution to belt tracking problems found whenever a short wide belt conveyor is utilized.

Manufactured by the world's most reliable producer of specialty conveyor equipment, Belt Merge Conveyors eliminate side load tracking problems encountered on regular belt conveyors. These units are specially designed for manufacturing, warehouse/distribution center and airline baggage applications. An optional series of fixed position bed idler rollers allows for the safe, smooth transition of extra-heavy product loads.

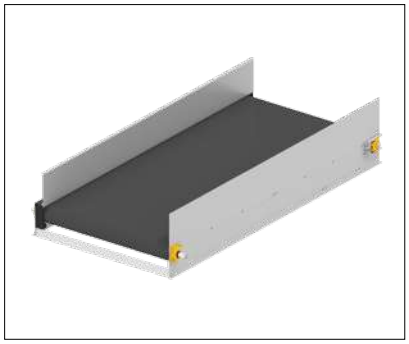

Technical Specifications

Generical technical data	
Max. Load Capacity	50 lbs/ft
Max. Conveyor Load	500 LBS
Conveyor Speed At CL	0 - 568 fpm
Ambient temperature	5° - 176° F

Drive Data	
Rated Voltage	400V / 50HZ / 3PH
	460V / 60HZ / 3PH
Power	.5HP - 7.5HP
Motor Type	Gear Motor
Drive Mount	Shaft Mounted
End Roll Diameter	6 in

Materials	
Belt Material	PHR 3-135 MF FR BB x BB
Construction	10 gauge / 3mm
Shaft Size	1 15/16"
Drive Chain	Tsubaki #50 0r #60
Finish	RAL DTM
Bearings	Peer MHS

Dimensions	
Frame Height	10-5/8 in / 270mm
Lenght	60" - 360"
LW Clearance (BSG)	10-5/8 in / 270mm
Min TOB Height	10-5/8 in / 270mm
Side Guards	0" - 12"

Options	
Underguarding	Expanded Metal
	Solid Metal Pinned
	Solid Steel
	Plastic Mesh

Drive Mount Styles	
Support	2" Square tubing
	3" Square tubing
	H/S Supports
	Floor Blocks
	Ceiling Hanger

Single Chain Merge Application
(Lateral force on belt in one direction only)

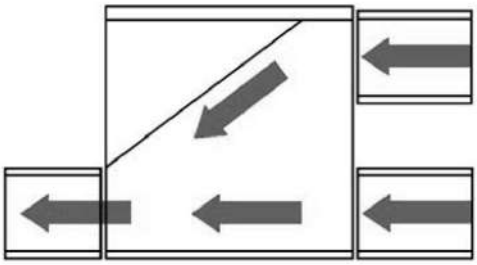

Double Chain Merge Application
(Lateral force on belt in two directions)

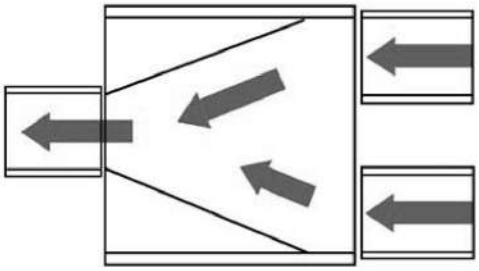

Diverters
Fixed diverters are custom-designed for your installation.

Positive Drive Belt System
The conveyor belt is positively driven by a shaft mounted sprocket engaging a precision sidebow chain which is attached directly to the outside edge of the belt. This positive drive system is unaffected by changes in loading, tension, temperature, humidity, and foreign material on the belt. The positive drive belt system ensures continuous, reliable operation even in harsh and difficult environments with minmal maintenance.

Note: the above models are examples only. Each conveyor is custom designed for your application.

© 2015 Interroll

Belt Conveyors & Merges:
Angle Merges

Merging Diverging Operations

For merging or diverging operations, Interroll has what you are looking for.

Interroll Angle Merge Conveyors facilitate the merging or diverging of two conveyor lines in a smooth and efficient manner.

Key Features include:

- Low friction angle bar
- 30 (Angle-Flo only) or 45 degree angles
- Spring take-up tension system (Angle-Flo only)
- Quiet operation
- Smooth positive angular transfer of products
- Simple belt tracking system
- Low maintenance
- Heavy duty steel construction
- Transfers small products
- Laced belt for quick change

AMS© (Angle Merge Short)

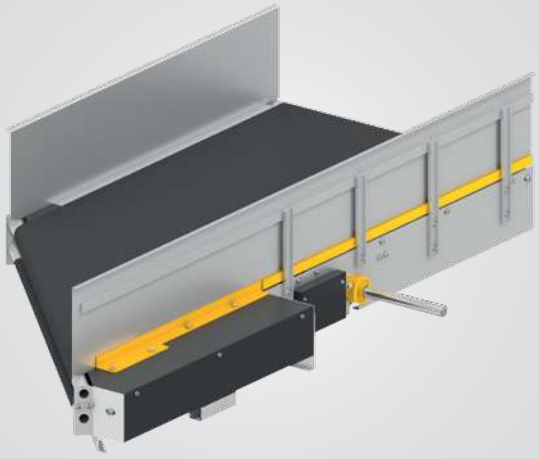

Angle-Flo

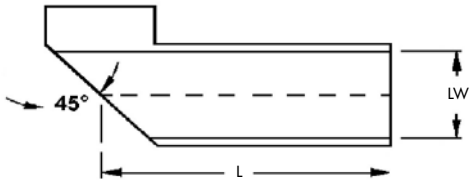

ANGLE MERGES

Merge Model Dimensions

Model	AXL	AX	AXH	AMS©
General Technical Data				
Max Load Capacity	40 lbs/ft	40 lbs/ft	40 lbs/ft	40 lbs/ft
Max Conveyor Load				
Conveyor Speed At CL	75 - 140 fpm	75 - 450 fpm	75 - 450 fpm	75 - 450 fpm
Merge Angle	45 or 30 Degrees	45 or 30 Degrees	45 or 30 Degrees	45 Degree
Direction	Merge / Diverge	Merge / Diverge	Merge / Diverge	Merge / Diverge
Ambient Temperature	5° - 176° F	5° - 176° F	5° - 176° F	5° - 176° F
Drive Data				
Rated Voltage	400V / 50HZ / 3PH 460V / 60HZ / 3PH 110V / 220V /60HZ / 1PH	400V / 50HZ / 3PH 460V / 60HZ / 3PH 110V / 220V /60HZ / 1PH	400V / 50HZ / 3PH 460V / 60HZ / 3PH 110V / 220V /60HZ / 1PH	400V / 50HZ / 3PH 460V / 60HZ / 3PH 110V / 220V /60HZ / 1PH
Power	.5HP - 2HP	.5HP - 5HP	.5HP - 5HP	3HP
Motor Type	Gear Motor	Gear Motor	Gear Motor	Gear Motor
Drive Mount	Shaft Mounted	Shaft Mounted	Shaft Mounted	Shaft Mounted
End Roll Diameter	2 in	2.5 in	3.5 in	6 in
Materials				
Belt Material	Flexam EF 10/2 0+07 Black M2 FR Others upon Request	Flexam EF 10/2 0+07 Black M2 FR Others upon Request	Flexam EF 10/2 0+07 Black M2 FR Others upon Request	Flexam EF 10/2 0+07 Black M2 FR Others upon Request
Construction	10 gauge / 3mm	10 gauge / 3mm	10 gauge / 3mm	10 gauge / 3mm
Shaft Size	1" - 1-3/16" 25mm - 30mm	1 7/16" 35mm	1-7/16" - 1-11/16" 35mm - 45mm	1-7/16" 35mm
Finish	RAL DTM	RAL DTM	RAL DTM	RAL DTM
Bearings	Peer MHS	Peer MHS	Peer MHS	Peer MHS
Dimensions				
Frame Height	7 in / 177mm	8.5 in / 216mm	12 in / 216mm	12 in / 216mm
Length (CL) Merge/Diverge	31" / 44"	41" / 57"	54" / 70"	36"
LW Clearance (BSG)	13"	29"	39"	39"
Min TOB Height	7 in / 177mm	8.5 in / 216mm	12 in / 216mm	12 in / 216mm
Side Guards	0" - 12"	0" - 21"	0" - 21"	12" or 21"
Options				
Belt Construction	Vulcanized Belt	Vulcanized Belt	Vulcanized Belt	N/A
Underguarding	Expanded Metal Solid Metal Pinned Plastic Mesh	Expanded Metal Solid Metal Pinned Plastic Mesh	Expanded Metal Solid Metal Pinned Plastic Mesh	Solid Metal included
Supports	2" Square tubing H/S Supports Floor Blocks Ceiling Hanger	2" Square tubing H/S Supports Floor Blocks Ceiling Hanger	2" Square tubing H/S Supports Floor Blocks Ceiling Hanger	2" Square tubing H/S Supports Floor Blocks Ceiling Hanger
Drip Hands				

Belt Drive System (Angle Flo only):

The conveyor belt is driven by its bottom side contacting a heavy duty lagged drive roll. Contamination of the belt surface does not effect the conveyor operation. A spring-loaded take-up maintains even belt tension even through changes in loading and temperature.

Note: the above dimensions are for Merge units only and represent the shortest length for the conveying width. Diverge units are typically longer. Call the factory for minimum lengths for diverge units. The above models are examples that show the narrowest and widest conveying widths for each frame height.

Merge Application

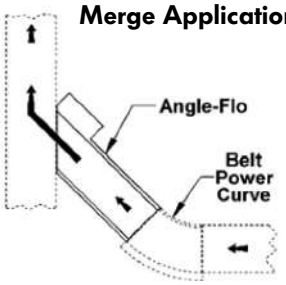

Diverge Application

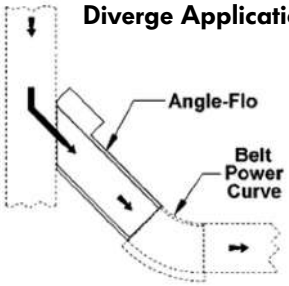

Direction of travel

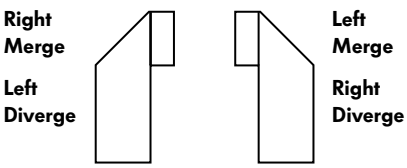

Belt Conveyors & Merges:
Queue-Flo

Positive Drive Queuing Conveyor

The Queue-Flo belt conveyor from Interroll

is a perfect solution whenever a positve-drive queuing conveyor or short, wide belt conveyor is required.

The positive-drive system ensures belt tracking without special adjustments and rugged dependability under heavy duty induction or metering applications.

The Queue-Flo is ideal for indexing, as the chain drive assures no belt drift. It is also ideal as a "gap" conveyor where a short length and wide belt width are required.

Positive Drive Belt System

The conveyor belt is positively driven by a shaft mounted sprocket engaging a precision sidebow chain which is attached directly to the outside edge of the belt. This positive drive system is unaffected by changes in loading, tension, temperature, humidity, and foreign material on the belt. The positive drive belt system ensures continuous, reliable operation even in harsh and difficult environments with minmal maintenance.

Technical Specifications

Sprocket Size	17
General Technical Data	
Max Load Capacity	40 lbs/ft
Max Conveyor Load	500 LBS
Conveyor Speed At CL	0 - 300 fpm / 1.78 m/s
Ambient Temperature	5° - 176° F
Drive Data	
Rated Voltage	400V / 50HZ / 3PH 460V / 60HZ / 3PH 110V / 220V /60HZ / 1PH
Power	.5HP - 2HP
Motor Type	Gear Motor
Drive Mount	Shaft Mounted
End Roll Diameter	3-3/8 in
Materials	
Belt Material	Flexam EF 10/2 0+A22 Black AS FR (Accumulation) PVOP (Queuing) Others upon Request
Construction	12 gauge / 2mm
Shaft Size	1-7/16" 35mm
Drive Chain	Tsubaki #50 Sidebow
Finish	RAL DTM
Bearings	Peer MHS
Dimensions	
Frame Height	7 in / 177mm
Length	18" - 240"
LW Clearance (BSG)	7" to 60"
Min TOB Height	7 in / 177mm
Side Guards	0" - 21"
Options	
Underguarding	Expanded Metal Solid Steel Plastic Mesh
Drive Mount Styles	
Supports	2" Square tubing H/S Supports Floor Blocks Ceiling Hanger

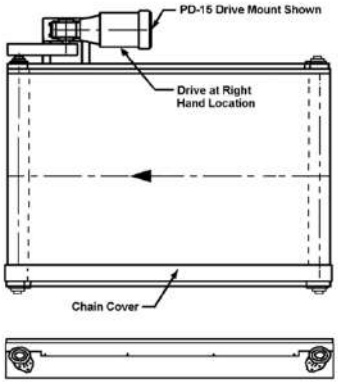

Queuing an induction angle Merge Conveyor

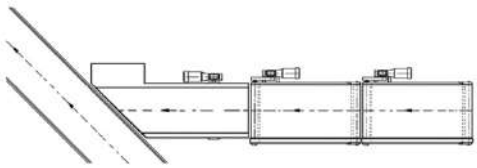

Short straight Conveyor between two Belt Curves

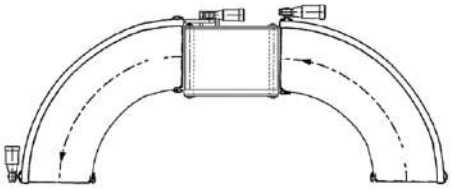

Note: Contact factory for applications requiring higher loads or speeds.

© 2015 Interroll

Belt Curves:
Interroll Portec Belt Curve

Interroll Portec Belt Curve

The Interroll Portec Belt Curve has been specifically designed to provide trouble-free performance for many years in a variety of applications.

Proven Interroll Portec Technology

- Smooth product transfers
- Low noise operation
- Complies with latest safety and sanitary standards
- Wide conveying widths available
- Custom designed for your specific application
- Low belt tension for long component life
- Rugged steel construction - no shortcuts or inferior materials
- Positive drive belt system means no end roll slip
- Simplified maintenance enhancements

The design accommodates many variations in width, arc, and weight conveyance. The laced belt can be changed within a very short time and does not require the removal of the drive package. Our Belt Curve can operate in much higher and lower ambient temperatures than a friction-driven conveyor and reaches speeds of more than 3 meters per second (600+ feet / minute).

The combination of heavy duty equipment, durability and simple maintenance matched with quiet, high speed operation make Interroll the company of choice for material handling professionals the world over.

INTERROLL PORTEC BELT CURVE

Positive Drive Belt System

The conveyor belt is positively driven by a shaft mounted sprocket engaging a precision sidebow chain which is attached directly to the outside edge of the belt. This positive drive system is unaffected by changes in loading, tension, temperature, humidity, and foreign material on the belt. The positive drive belt system ensures continuous, reliable operation even in harsh and difficult environments with minmal maintenance.

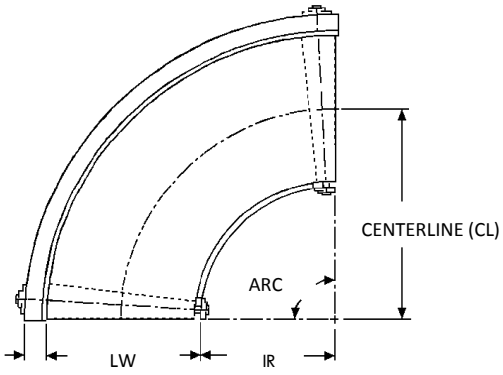

Technical Specifications

Sprocket size	17	27	40
General Technical Data			
Max Load Capacity	30 lbs./ft.	50 lbs./ft. w/o Bedrolls 75 lbs./ft. w/o Single bedrolls 150 lbs./ft. w/o Double bedrolls	50 lbs./ft. w/o Bedrolls 75 lbs./ft. w/o Single bedrolls 150 lbs./ft. w/o Double bedrolls
Max Conveyor Load	250 lbs. OCR <=47" OCR	500 lbs. OCR <=87"	500 lbs. OCR <=168"
Conveyor speed at CL	0 - 250 FPM	0 - 375 FPM	0 - 560 fpm
Ambient temperature	5° - 176° F	5° - 176° F	5° - 176° F
Drive Data			
Rated voltage	400V / 50HZ / 3PH 460V / 60HZ / 3PH 110V / 220V / 60HZ / 1PH	400V / 50HZ / 3PH 460V / 60HZ / 3PH 110V / 220V / 60HZ / 1PH	400V / 50HZ / 3PH 460V / 60HZ / 3PH 110V / 220V / 60HZ / 1PH
Power	.5HP - 2HP	.5HP - 5HP	5HP - 7.5HP
Motor Type	Gear Motor	Gear Motor	Gear Motor
Drive Mount	Shaft Mounted	Shaft Mounted	Shaft Mounted
End roll diameter at OR	3 in	5 in	7.5 in
Materials			
Belt Material	Flexam EF 10/2 0+A22 Black AS FR Others upon request	Flexam EF 10/2 0+A22 Black AS FR Others upon request	Flexam EF 10/2 0+A22 Black AS FR Others upon request
Construction	12 Gauge Steel / 2.5 mm	12 Gauge Steel / 2.5 mm	12 Gauge Steel / 2.5 mm
Shaft Size	1" - 1-3/16" 25mm - 30mm	1-3/16" - 1-7/16" 30mm - 35mm	1-7/16"" - 1 15/16" 35mm - 45mm
Drive Chain	Tsubaki #50 Sidebow	Tsubaki #50 Sidebow	Tsubaki #50 Sidebow
Finish	RAL DTM	RAL DTM	RAL DTM
Bearing	Peer MHS	Peer MHS	Peer MHS
Dimensions			
Frame Height	7 in / 177 mm	8.5 in / 216 mm	12 in / 305 mm
Angle	15 - 180 Degrees	15 - 180 Degrees	15 - 180 Degrees
Inner Radius (IR)	12" - 87"	17" - 87"	17" - 168"
LW Clearance (BSG)	Dependent on IR	Dependent on IR	Dependent on IR
Min TOB Height	7 in / 177mm	8.5 in / 216 mm	12 in / 305 mm
Side Guards	0" - 12"	0" - 12"	0" - 12"
Options			
Vulcanized Unit			
Drip Hands Optional			
Drive Mount Style			
Nickel Plate Components			
Underguarding	Expanded Metal Solid Metal Pinned Solid Steel Plastic Mesh	Expanded Metal Solid Metal Pinned Solid Steel Plastic Mesh	Expanded Metal Solid Metal Pinned Solid Steel Plastic Mesh
Supports	2" Square tubing 3" Square tubing H/S Supports Floor Blocks Ceiling Hanger	2" Square tubing 3" Square tubing H/S Supports Floor Blocks Ceiling Hanger	2" Square tubing 3" Square tubing H/S Supports Floor Blocks Ceiling Hanger

© 2015 Interroll

Belt Curve
Airport Applications

Interroll Portec Belt Curve Airport Applications

Sprocket size	**27**	**40**
General Technical Data		
Max Load Capacity	50 lbs/ft	50 lbs/ft
Max Conveyor Load	500 lbs OCR <=87"	500 lbs OCR <=87"
Conveyor speed at CL	0 - 375 fpm	0 - 560 FPM
Ambient temperature	5° - 176° F	5° - 176° F
Drive Data		
Rated voltage	400V / 50HZ / 3PH	400V / 50HZ / 3PH
	460V / 60HZ / 3PH	460V / 60HZ / 3PH
Power	1HP - 5HP	1HP - 7.5HP
Motor Type	Gear Motor	Gear Motor
Drive Mount	Shaft Mounted	Shaft Mounted
End Roll Diameter	5 in	7.5"
Materials		
Belt Material	Flexam EF 10/2 0+A22 Black AS FR	Flexam EF 10/2 0+A22 Black AS FR
	Others upon Request	Others upon Request
Construction	12 gauge / 2.5mm	12 gauge / 2.5mm
Shaft Size	1-7/16" - 1-11/16" 35mm - 45mm	1-7/16"" - 1-11/16" 35mm - 45mm
Drive Chain	Tsubaki #50 Sidebow	Tsubaki #50 Sidebow
Finish	RAL DTM	RAL DTM
Bearing	Peer MHS	Peer MHS
Dimensions		
Frame Height	8.5 in / 216mm	12 in / 305mm
Angle	15 - 180 Degrees	15 - 180 Degrees
Inner Radius (IR)	48"	48"
LW Clearance (BSG)	39"	39"
Min TOB Height	8.5 in / 216mm	12 in / 305mm
Side Guards	12" or 21"	12" or 21"
Options		
Underguarding	Expanded Metal	Expanded Metal
	Solid Metal Pinned	Solid Metal Pinned
	Solid Steel	Solid Steel
	Plastic Mesh	Plastic Mesh
Mark and Tag	Vinyl Stencil	Vinyl Stencil
Supports	2" Square tubing	2" Square tubing
	3" Square tubing	3" Square tubing
	H/S Supports	H/S Supports
	Floor Blocks	Floor Blocks
	Ceiling Hanger	Ceiling Hanger
Drip Pan	Standard	Standard
	Standard w/ Drain Plug	Standard w/ Drain Plug

Belt Curve
CEP Applications

Interroll Portec Belt Curve CEP Applications

Sprocket size	27	40
General Technical Data		
Max Load Capacity	50 lbs/ft 75 lbs/ft w/Single Bedrolls 150 lbs./ft. w/Double bedrolls	50 lbs/ft 75 lbs./ft. w/Single bedrolls 150 lbs./ft. w/Double bedrolls
Max Conveyor Load	500 lbs OCR <=87"	500 lbs OCR <=168"
Conveyor speed at CL	0 - 375 fpm	0 - 560 FPM
Ambient temperature	5° - 176° F	5° - 176° F
Drive Data		
Rated voltage	400V / 50HZ / 3PH 460V / 60HZ / 3PH	400V / 50HZ / 3PH 460V / 60HZ / 3PH
Power	.5HP - 5HP	.5HP - 7.5HP
Motor Type	Motor / Reducer	Motor / Reducer
Drive Mount	Shaft Mounted	Shaft Mounted
End roll diameter	5 in	7.5"
Materials		
Belt Material	PHR2-160 LI 3/64 X BB E 12/2 U0/V6 GSTR-C-SE	PHR2-160 LI 3/64 X BB E 12/2 U0/V6 GSTR-C-SE
Construction	12 gauge / 2.5mm	12 gauge / 2.5mm
Shaft Size	1-7/16" - 1-11/16" 35mm - 45mm	1-7/16"" - 1 15/16" 35mm - 45mm
Drive Chain	Tsubaki #50 Sidebow	Tsubaki #50 Sidebow
Finish	RAL DTM	RAL DTM
Bearing	Peer MHS	Peer MHS
Dimensions		
Frame Height	8.5 in / 216mm	12 in / 305mm
Angle	15 - 180 Degrees	15 - 180 Degrees
Inner Radius (IR)	60", 72", or 96"	60", 72", or 96"
LW Clearance (BSG)	43", 49"or 61.5"	43", 49"or 61.5"
Min TOB Height	8.5 in / 216mm	12 in / 305mm
Side Guards w/Belt Wiper	12" or 21"	12" or 21"
Options		
Bulk Flow (UPS)	N/A	
Memo Lube		
Tsubaki Shock Relay (UPS)		
End Roll Guards (UPS)		
Underguarding	Expanded Metal or Solid Metal	Expanded Metal or Solid Metal
Supports	2" Square tubing 3" Square tubing H/S Supports Floor Blocks Ceiling Hanger	2" Square tubing 3" Square tubing H/S Supports Floor Blocks Ceiling Hanger

Belt Curves:
Z-Turn Interroll Portec Belt Curve

Small Inside Radius Curve

Proven Interroll Portec Technology

- Small inside radius for space-saving conveyor layout
- Cylindrical end rolls for outstanding product transfers
- Bi-directional operation
- Positive drive belt system means no end roll slip
- Low belt tension for long component life
- Custom designed for your specific application
- Low noise operation
- Rugged steel construction - no shortcuts or inferior materials
- Simplified maintenance enhancements

A compact, quiet and reliable 180 degree belt power curve.

Technical Specifications

Sprocket size	8ZT30	8ZT50
General Technical Data		
Max Load Capacity	40 lbs/ft	40 lbs/ft
Max Conveyor Load	240 lbs	350 lbs
Conveyor speed at CL	0 - 170 fpm	0 - 170 FPM
Ambient temperature	5° - 176° F	5° - 176° F
Drive Data		
Rated voltage	400V / 50HZ / 3PH 460V / 60HZ / 3PH 110V / 220V /60HZ / 1PH	400V / 50HZ / 3PH 460V / 60HZ / 3PH 110V / 220V /60HZ / 1PH
Power	.5HP - 2HP	.5HP - 5HP
Motor Type	Gear Motor	Gear Motor
Drive Mount	Shaft Mounted	Shaft Mounted
End Roll Diameter	3 in	3 in
Materials		
Belt Material	Flexam EF 10/2 0 +A22 Black AS FR	Flexam EF 10/2 0 +A22 Black AS FR
Construction	12 gauge / 2.5mm	12 gauge / 2.5mm
Shaft Size	1-7/16" 35mm	
Drive Chain	Tsubaki #50 Sidebow	Tsubaki #50 Sidebow
Finish	RAL DTM	RAL DTM
Bearing	Peer MHS	Peer MHS
Dimensions		
Frame Height	8.5 in / 216mm	8.5 in / 216mm
Angle	180 Degrees	180 Degrees
Inner Radius (IR)	8"	8"
LW Clearance (BSG)	30"	50"
Min TOB Height	8.5 in / 216mm	12 in / 305mm
Side Guards	0" - 12"	0" - 12"
Options		
Underguarding	Expanded Metal Solid Steel Plastic Mesh	Expanded Metal Solid Steel Plastic Mesh
Supports	2" Square tubing 3" Square tubing H/S Supports Floor Blocks Ceiling Hanger	2" Square tubing 3" Square tubing H/S Supports Floor Blocks Ceiling Hanger
Drive Mount Styles		
Drip Pan	Standard Standard w/ Drain Plug	Standard Standard w/ Drain Plug

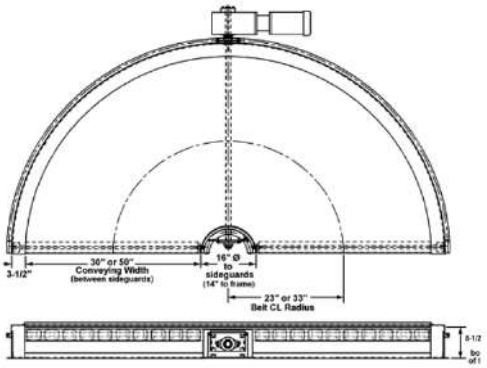

Positive Drive Belt System

The conveyor belt is positively driven by a shaft mounted sprocket engaging a precision sidebow chain which is attached directly to the outside edge of the belt. This positive drive system is unaffected by changes in loading, tension, temperature, humidity, and foreign material on the belt. The positive drive belt system ensures continuous, reliable operation even in harsh and difficult environments with minmal maintenance.

Belt Curves:
Spiral Curves

Elevation and Directional Unit Handling

Proven Interroll Technology

- High speed capacity
- Low noise operation
- Positive drive belt system means no end roll slip
- Rugged steel construction - no shortcuts, such as wood components
- Low belt tension for long component life
- Wide conveying widths available
- Simplified maintenance enhancements
- Complies with latest safety standards
- Over 57 years experience Interroll invented the Spiral Curve belt conveyor

Getting up and around made easy...

Interroll Spiral Curve

Positive Drive Belt System

The conveyor belt is positively driven by a shaft mounted sprocket engaging a precision sidebow chain which is attached directly to the outside edge of the belt. This positive drive system is unaffected by changes in loading, tension, temperature, humidity, and foreign material on the belt. The positive drive belt system ensures continuous, reliable operation even in harsh and difficult environments with minmal maintenance.

Technical Specifications

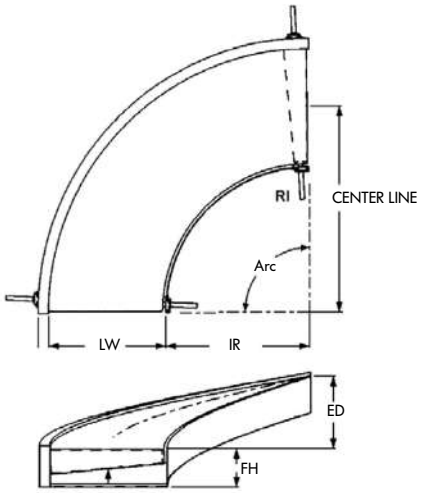

Sprocket size	17	27	40
General Technical Data			
Max Load Capacity	30 lbs/ft	50 lbs/ft	50 lbs/ft
		75 lbs/ft w/Single Bedrolls	75 lbs/ft w/Single Bedrolls
		150 lbs/ft w/ Double Bedrolls	150 lbs/ft w/ Double Bedrolls
Max Conveyor Load	250 lbs OCR <=47"	500 lbs OCR <=87"	500 lbs OCR <=87"
Conveyor speed at CL	0 - 250 fpm	0 - 350 fpm	0 - 350 fpm
Inclined / Declined	Angle Dependent on OCR	Angle Dependent on OCR	Angle Dependent on OCR
Ambient temperature	5° - 176° F	5° - 176° F	5° - 176° F
Drive Data			
Rated voltage	400V / 50HZ / 3PH	400V / 50HZ / 3PH	400V / 50HZ / 3PH
	460V / 60HZ / 3PH	460V / 60HZ / 3PH	460V / 60HZ / 3PH
	110V / 220V /60HZ / 1PH	110V / 220V /60HZ / 1PH	110V / 220V /60HZ / 1PH
Power	.5HP - 2HP	.5HP - 5HP	.5HP - 7.5HP
Motor Type	Gear Motor	Gear Motor	Gear Motor
Drive Mount	Shaft Mounted	Shaft Mounted	Shaft Mounted
OR End Roll Diameter	3 in	5 in	7.5"
Materials			
Belt Material	PHR 2-160 GRII RTxBB Black	PHR 2-160 GRII RTxBB Black	PHR 2-160 GRII RTxBB Black
	PHR2-160 LI 3/64 X BB	PHR2-160 LI 3/64 X BB	PHR2-160 LI 3/64 X BB
	Others upon Request	Others upon Request	Others upon Request
Construction	12 gauge / 2.5mm	12 gauge / 2.5mm	12 gauge / 2.5mm
Shaft Size	1" - 1-3/16" 25mm - 30mm	1" - 1-7/16" 25mm - 35mm	1-7/16"" 1 15/16" 35mm - 45mm
Drive Chain	Tsubaki #50 Sidebow	Tsubaki #50 Sidebow	Tsubaki #50 Sidebow
Finish	RAL DTM	RAL DTM	RAL DTM
Bearing	Peer MHS	Peer MHS	Peer MHS
Dimensions			
Frame Height	7 in / 177mm	8.5 in / 216mm	12 in / 305mm
Angle	15 - 180 Degrees	16 - 180 Degrees	17 - 180 Degrees
Inner Radius (IR)	12" - 87"	17" - 87"	17" - 168"
LW Clearance (BSG)	Dependent on IR	Dependent on IR	Dependent on IR
Min TOB Height	7 in / 177mm	8.5 in / 216mm	12 in / 305mm
Side Guards	0" - 21"	0" - 21"	0" - 21"
Options			
Underguarding	Expanded Metal	Expanded Metal	Expanded Metal
	Solid Metal Pinned	Solid Metal Pinned	Solid Metal Pinned
	Solid Steel	Solid Steel	Solid Steel
	Plastic Mesh	Plastic Mesh	Plastic Mesh
Drive Mount Styles			
Mark and Tag	Vinyl Stencil	Vinyl Stencil	Vinyl Stencil
Supports	2" Square tubing	2" Square tubing	2" Square tubing
	3" Square Tubing	3" Square Tubing	3" Square Tubing
	H/S Supports	H/S Supports	H/S Supports
	Floor Blocks	Floor Blocks	Floor Blocks
	Ceiling Hanger	Ceiling Hanger	Ceiling Hanger
Drip Pan	Standard	Standard	Standard
	Standard w/ Drain Plug	Standard w/ Drain Plug	Standard w/ Drain Plug

© 2015 Interroll

Belt Curves:
Spiral Lift

Continuous Vertical Unit Handling

The answer to your vertical conveying needs

Spiral-Lift Applications

- Beverages
- Printing Plants/Newspapers
- Mail Order Companies
- Distribution Centers
- Factories
- Airport Baggage Handling
- Medical Devices
- Food Processing Facilities

Convey It Up or Down

- Saves floor space
- Requires no metering, accumulation or indexing
- Positive drive belt system means no end roll slip
- Wide selection of entry and exit combin\ations
- Custom designed for your particular operation
- Durable all steel construction
- Fully assembled or modular construction
- High conveying speeds available
- Steep angles of incline/decline available (over 21° @ centerline)
- Wide belt widths available
- Over 40 years experience building spiral belt conveyors
- No exposed pinch points over or under belt

Technical Specifications

Sprocket size	17	27	40
General Technical Data			
Max Load Capacity per module	50 lbs/ft	50 lbs/ft 75 lbs/ft w/Single Bedrolls 150 lbs/ft w/ Double Bedrolls	50 lbs/ft 75 lbs/ft w/Single Bedrolls 150 lbs/ft w/ Double Bedrolls
Max Module Load	290 lbs OCR <=37"	500 lbs OCR <=87"	500 lbs OCR <=168"
Conveyor Speed At CL	0 - 140 fpm	0 - 300 fpm	0 - 350 fpm
Max Ed per 360o	Angle Dependent on OCR	Angle Dependent on OCR	Angle Dependent on OCR
Ambient temperature	-20°F to 225°F (-29°C to 107°C)	-20°F to 225°F (-29°C to 107°C)	-20°F to 225°F (-29°C to 107°C)
Drive Data			
Rated voltage	400V / 50HZ / 3PH 460V / 60HZ / 3PH 110V / 220V /60HZ / 1PH	400V / 50HZ / 3PH 460V / 60HZ / 3PH 110V / 220V /60HZ / 1PH	400V / 50HZ / 3PH 460V / 60HZ / 3PH 110V / 220V /60HZ / 1PH
Power	.5HP - 2HP	.5HP - 5HP	.5HP - 7.5HP
Motor Type	Gear Motor	Gear Motor	Gear Motor
Drive Mount	Shaft Mounted OR	Shaft Mounted OR	Shaft Mounted OR
End Roll Diameter	3 in	5 in	7.5"
Materials			
Belt Material	PHR 2-160 GRII RTxBB Black Others upon Request	PHR 2-160 GRII RTxBB Black Others upon Request	PHR 2-160 GRII RTxBB Black Others upon Request
Construction	12 gauge / 2.5mm	12 gauge / 2.5mm	12 gauge / 2.5mm
Shaft Size	1" - 1-3/16" 25mm - 30mm	1-3/16" - 1-7/16" 30mm - 40mm	1-7/16"" - 1 15/16"" 35mm - 45mm
Drive Chain	Tsubaki #50 Sidebow	Tsubaki #50 Sidebow	Tsubaki #50 Sidebow
Finish	RAL DTM	RAL DTM	RAL DTM
Bearing	Peer MHS	Peer MHS	Peer MHS
Dimensions			
Frame Height	7 in / 177mm	8.5 in / 216mm	12 in / 305mm
Module Arc	Dependent on IR and LW	Dependent on IR and LW	Dependent on IR and LW
Inner Radius (IR)	20" - 87"	20" - 87"	20" - 90"
LW Clearance (BSG)	Dependent on IR	Dependent on IR	Dependent on IR
Min TOB Height	7 in / 177mm	8.5 in / 216mm	12 in / 305mm
Side Guards	0" - 12"	0" - 12"	0" - 12"
Options			
Underguarding	Expanded Metal Solid Steel Plastic Mesh	Expanded Metal Solid Steel Plastic Mesh	Expanded Metal Solid Steel Plastic Mesh
Drive Mount Styles			
Drip Pan	Standard Standard w/ Drain Plug	Standard Standard w/ Drain Plug	Standard Standard w/ Drain Plug

Spiral Belt Conveyor

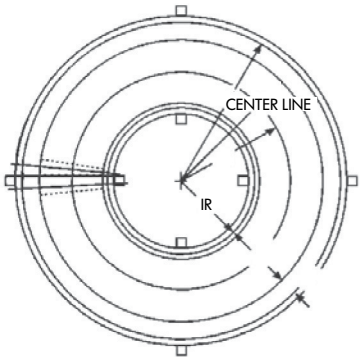

Application Specials

Interroll can design and build the Spiral-Lift to meet your special application requirements.

Positive Drive Belt System

The conveyor belt is positively driven by a shaft mounted sprocket engaging a precision sidebow chain which is attached directly to the outside edge of the belt. This positive drive system is unaffected by changes in loading, tension, temperature, humidity, and foreign material on the belt. The positive drive belt system ensures continuous, reliable operation even in harsh and difficult environments with minmal maintenance.

Entry/Exit Orientation

Clockwise (Right-hand)

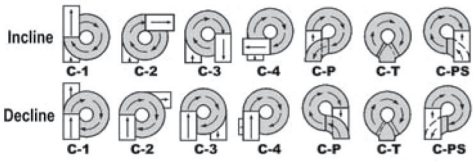

Counter-Clockwise (Left-hand)

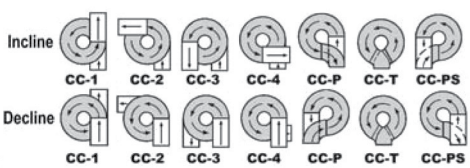

© 2015 Interroll

Chutes:
Fiberglass Chutemaster

Compact Lowering Operations

- **Saves Floor Space**
- **Economical Cost**
- **Virtually Maintenance-free**

The ChuteMaster Fiberglass Spiral Chute

from Interroll provides a safe, secure means of lowering your products.

Specially designed fiberglass module profiles help control the descending speed of your products.

In high humidity situations, the characteristics of the gel-coated fiberglass assists products to flow freely, gently and safely.

Made of durable hand-laid fiberglass and have a special gel-coating to provide long wearing low-friction service

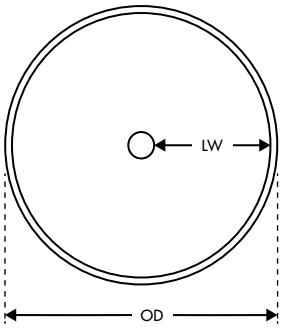

Technical Specifications

Model	CM-18	CM-25	CM-35	CM-45	CM-51	CM-61	CM-27
General Technical Data							
Outside Diameter (OD)	40″	54.75″	74″	94″	106″	126″	59″
Inside Diameter	5.56″	5.56″	10.75″	10.75″	10.75″	10.75″	9″
Conveying Width (LW)	15.25″	22.63″	29.63″	39.63″	45.63″	55.63″	18″
Angle of Decline	27 Degrees	27 Degrees	27 Degrees	27 Degrees	27 Degrees	27 Degrees	27 Degrees
Ambient Tempature	5° - 176° F	5° - 176° F	5° - 176° F	5° - 176° F	5° - 176° F	5° - 176° F	5° - 176° F
Conveying Radius	18	25	35	45	51	61	27
Materials							
Profile	Fiberglass	Fiberglass	Fiberglass	Fiberglass	Fiberglass	Fiberglass	Fiberglass
Pole Construction	5″ Round Pipe	5″ Round Pipe	10″ Round Pipe	10″ Round Pipe	10″ Round Pipe	10″ Round Pipe	4″ Square Tube
Profile Finish	Black Gel Coat	Black Gel Coat	Black Gel Coat	Black Gel Coat	Black Gel Coat	Black Gel Coat	Black Gel Coat
Pole Finish	RAL DTM	RAL DTM	RAL DTM	RAL DTM	RAL DTM	RAL DTM	RAL DTM
Dimensions							
Min Height Exit to Floor	10″	10″	12″	12″	12″	12″	10″ <-- (W/ No Exit Slide)
Elevation Per 360O	33″	45″	63″	70.5″	75″	75″	41″
Options							
Sort Table / Outriggers / Multi Section Pole / Supports / Custom Tapered Steel Entry or Exit Slides / Standard Fiberglass Entry and Exit Slides / Multi Entry Points							

Note: Elevation dimension does not include entry/exit components.
CM51 and CM61 must ship disassambled.

Entry/Exit Slides

A ChuteMaster spiral chute is normally composed of fiberglass 90° profiles with an exit scoop. Additionally, a custom entry slide, a custom exit slide, and/or a sort table can be provided.

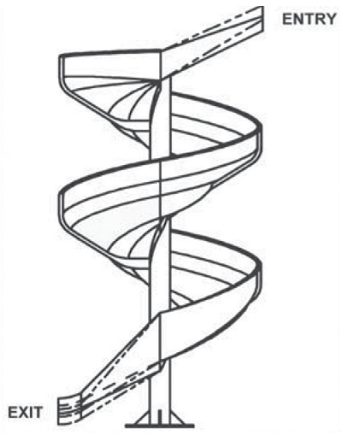

Entry/Exit Configurations

Right Decline (clockwise)

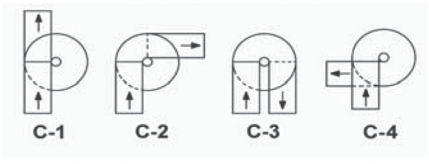

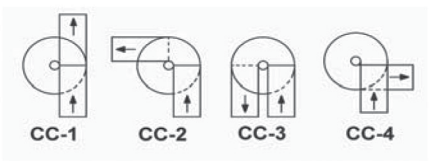

Left Decline (counter-clockwise)

© 2015 Interroll

Chutes:
Spiral Fiberglass Chute with Skate Wheels

Gravity and Skatewheels Combined

- **Durable**
- **Cost Effective**
- **Maintenance Free**

Spiral Fiberglass Chute With Skate Wheels

An efficient and effective design that utilizes gravity and skate wheels to move trays from one level to another.

Each module has a flat bottom with vertical sides to contain the trays/totes and assist in maintaining tray/tote orientation. Product descent is controlled through the unique spiral design.

It is constructed out of durable hand-laid fiberglass and is an inexpensive alternative to conventional equipment.

General Description

The CM-27 with skate wheels is a spiral chute consists of reinforced 90° fiberglass modules assembled to a center pole support. Each module is attached to the square center pole with a steel arm. Trays/tote boxes are fed into the chute at the top and are gravity fed down to the bottom. It is possible to utilize a swoop module at the end for transitioning the tray/tote box to a horizontal take-away conveyor. An efficient and effective design that utilizes skatewheels to move trays from one level to another. Each module has a flat bottom with vertical sides to contain the trays/totes and assist in maintaining tray/tote orientation.

© 2015 Interroll

Chutes:
STS Spiral Totes Slide

Economical Totes Descent

Rigid Plastic Totes

- Compact footprint
- Low-friction sliding surface
- Fully assembled or modular design
- Low Maintenance
- Custom entry and exit slides
- All steel construction

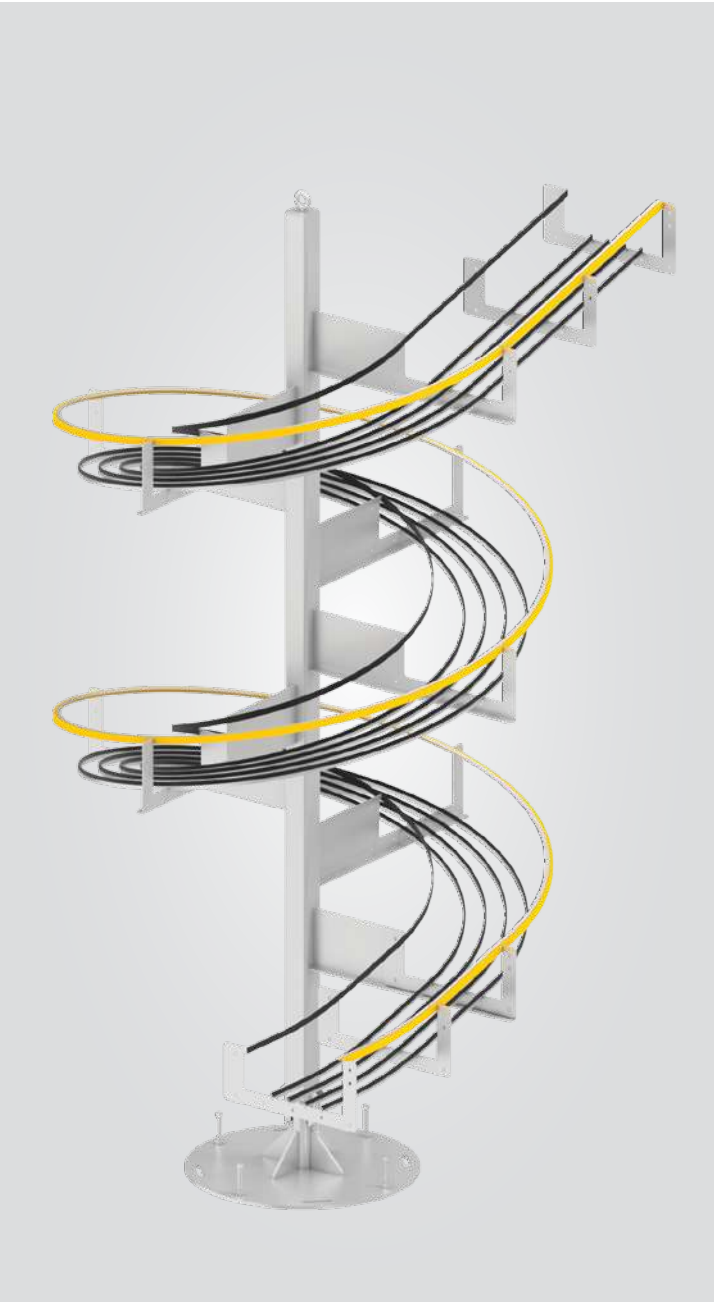

The STS Spiral Tote Slide

from Interroll is an economical way of lowering rigid plastic tote boxes. Each STS Spiral Slide is specifcally designed to accommodate the size and sliding characteristics of a particular plastic tote box.

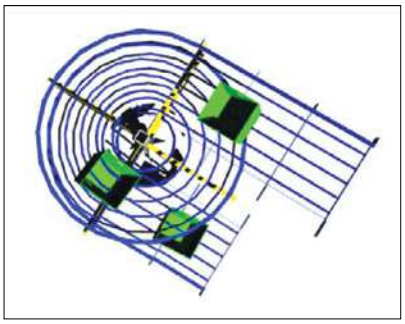

STS SPIRAL TOTE SLIDE

A Spiral Slide Specifically Designed for Rigid Plastic Totes

Technical Specifications

General Technical Data	
Max Load Capacity	50 lbs/tote
Max Unit Load	<=1 tote per 180 degrees
Angle of Decline	15 - 20 Degrees
Ambient temperature	5° - 176° F
Materials	
Slide Construction	11 gauge / 2mm
Pole Construction	4" Square Tube
Sliding Surface	7/16" UHMW-PE
Finish	RAL DTM
Dimensions	
Min Height (No Exit Slide)	24"
Min Inner Radius (IR)	12"
Max Outer Radius (OR)	51"
LW Clearance (BSG)	Dependent on Tote Width and Length
Side Guards	Dependent on Tote Height
Options	
Sort Table	
Stop	
Outriggers	
Multi Section Pole	
Entry & Exit Slides	

- Low-friction UHMW
- 24" (610 mm) exit swoop ensures a smooth transition to the adjoining takeaway conveyor
- Custom entry and exit straight slides to match the elevations of the adjoining conveyors
- Custom side rail for the best shape and height location for a particular tote box
- Fully assembled or modular design with 90 or 180 degree sections

Entry/Exit Configurations

Right Decline (clockwise)

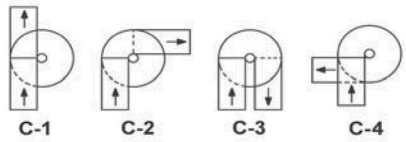

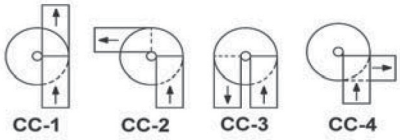

Left Decline (counter-clockwise)

Efficient and Effective Design

The STS Spiral Slide is a perfect solution for applications with a continuous flow of standardized rigid plastic totes. The spiral design provides at least three times the floor savings over conventional decline conveyors. The size of the spiral slide allows it to be used in tight situations, such as elevator shafts and other small spaces. Please consult with your Interroll representative and provide specifications, including tote size, tote weights (lightest to heaviest) and tote type.

- STS is designed for hard plastic totes with lids. The only exception is if always conveying empty totes.
- The sliding speed within the chute will vary depending upon the weight and the coefficient of friction of the bottom of each tote.
- Interroll cannot engineer for a tote weight variance in excess of 10 (ten) pounds when the lightest weight loaded tote is 5 (five) pounds or less.

© 2015 Interroll

Supermarket Solutions:
Cassette

Interroll Cassette Conveyor

Product Features

- U or Z profiled frame
- All galvanized steel construction
- All stainless steel construction
- Galvanized & stainless steel construction
- Two-ply belt with PVC cover

Product Benefits

- High load capacity
- Modular drop-in design

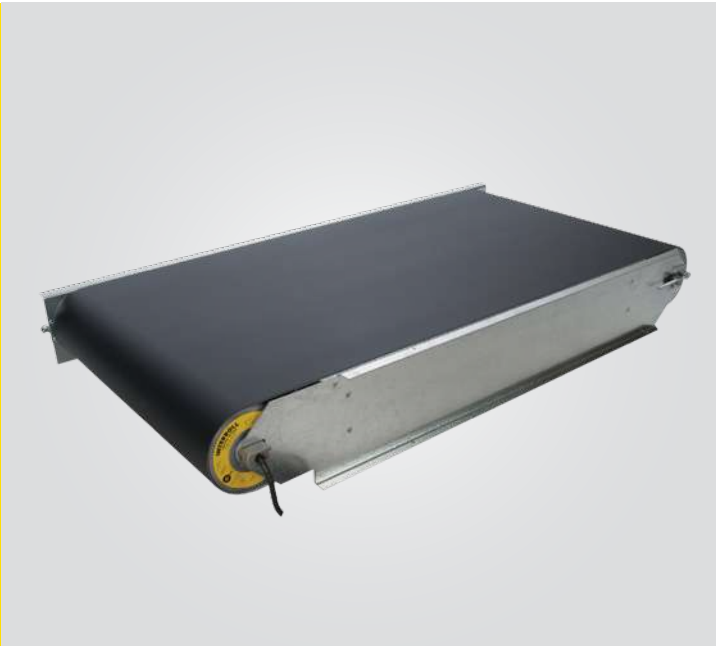

General Technical Data

Length	20" to 96"
Belt width	12" to 26"
Min. ratio length/width	2
Voltage	115V/60Hz/1Ph
Optional voltage	230V/50-60Hz/1Ph 230/60Hz/3Ph 460/60Hz/3Ph
Drive motor diameter	113mm (4.5") or 80mm (3.15")
Idler pulley diameter	Standard 4.5" (113mm) Optional 1.9" or 3.15"
Belt speed options	27/35/45/58 FPM
Load capacity (max.)	Small 110 lb Medium 220 lb Large 330 lb

Note
For more information on this product, please contact Interroll Canada Ltd. 1201 Gorham Street - Newmarket, Ontario L3Y 7V1 - Canada

Supermarket Solutions:
Drum Motors

Interroll Check Stand Drum Motors 80 & 113

Product Features

- Techno-polymer planetary gearbox
- Lightweight
- Single-rated voltage
- 3-phase or 1-phase AC induction motor
- Maintenance free
- Lifetime lubricated
- Reversible
- Low noise

General Technical Data

	Drum Motor 80	**Drum Motor 113**
Motor type	Asynchronous squirrel cage motor	Asynchronous squirrel cage motor
Insulation class (motors windings)	Class B	Class B
Voltage	115V +/- 5%, 1PH (IEC 34/38) 230V +/- 5%, 1PH (IEC 34/38)	116V +/- 5%, 1PH (IEC 34/38) 230V +/- 5%, 1PH (IEC 34/38) 230V +/- 5%, 3PH (IEC 34/38) 460V +/- 5%, 3PH (IEC 34/38)
Frequency	50/60Hz	50/60Hz
Internal shaft sealing system	Double lipped oil seal	Double lipped oil seal
Internal end housing sealing system	Two (2) O-rings each side	Two (2) O-rings each side
Protection rate	IP 64	IP 64
Thermal protection	Resettable bi-metal switch	Resettable bi-metal switch
Rated power, 1 Ph	0.15 HP	0.1 HP to 0.2 HP
Rated power, 3 Ph	N/A	0.25 HP
Shell speed (ft/min), 1 Ph	27 or 35	27, 36, 46 or 58
Rated torque, 1 Ph	149 in-lb and 115 in-lb	124 in-lb and 380 in-lb
Rated torque, 3 Ph	N/A	243 in-lb and 416 in-lb
Face width	12.8 - 30"	11" - 38"

Note
For more information on this product, please contact Interroll Canada Ltd. 1201 Gorham Street - Newmarket, Ontario L3Y 7V1 - Canada

© 2015 Interroll

About Interroll

Established in 1959, Interroll has grown to become the world's leading supplier of key equipment for material handling. Whether you're handling boxes, pallets, parcels or soft goods, no other supplier has such a comprehensive range of solutions on offer.

This is why system integrators, OEMs and operators choose Interroll as a trusted partner for material handling installations, worldwide.

Interroll's global reach ensures quick delivery and superior after-sale service for customers, no matter where they are. By helping increase our customers' efficiency, we boost their competitiveness in today's high-stress marketplace.

Interroll Atlanta LLC
159 Corporate Dr N
Hiram, GA 30141
+1 (855) 869 1828
atl.sales@interroll.com

Interroll Engineering West Inc.
1 Forge Rd
Cañon City, CO 81212
+1 (719) 275 7471
cc.sales@interroll.com

interroll.us

Interroll reserves the right to modify the technical features of its products at any time. Technical information, volumes, data and features are only rough guidelines.

© Interroll 2015

EN-US/06.15/UM/PI-2.1